SOLA — TECHNICAL DATA SHEET

Rev. C

DESCRIPTION

CATALOG:	STARTING METHOD:	INPUT VOLTAGE:	OCV:	FREQUENCY:
E620-F-45688110-TP	Rapid Start	120 V~	720 V~	60 Hz

BALLAST TYPE:	CLASS:	TYPE:	LAMP CONNECTION:	SOUND RATED:	
Magnetic Sign	P	2 outdoor	Series	D	NO PCB'S

ELECTRICAL CHARACTERISTICS*

LAMP TYPE	NUMBER OF LAMPS	LAMP FOOTAGE (ft)	LAMP WATTS	MIN. START TEMP. (°F/°C)	INPUT WATTS (Watts)	INPUT CURRENT (Amps)	BALLAST FACTOR	B.E.F.	P.F.	THD %	LAMP CREST FACTOR
F72T12/HO	4	24	87	-20/-29	375	3.68	0.87	0.232	0.85	20	1.7
F72T12/HO	5	30	87	-20/-29	443	4.07	0.87	0.196	0.91	14	1.7
F96T12/HO	5	40	113	-20/-29	526	4.45	0.86	0.163	0.98	7	1.6
F96T12/HO	6	48	113	-20/-29	588	4.92	0.85	0.144	0.99	7	1.5

PHYSICAL CHARACTERISTICS

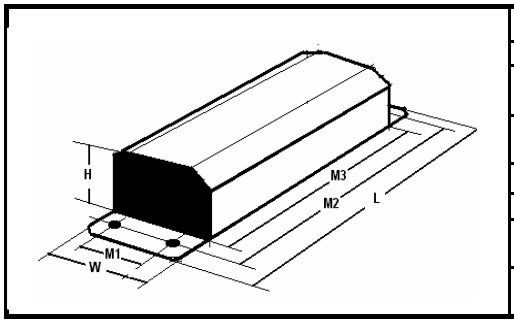

CASE DIMENSIONS

UNITS	M1	M2	M3	W	L	H
INCHES	2	18.625	18.00	3.187	19.190	2.655
TOL(+/-)	0.010	0.010	0.010	0.050	0.050	0.050
MM	51	473	457	81	487	67
TOL(+/-)	0.25	0.25	0.25	1.30	1.30	1.30

LEAD LENGTH

UNITS	BLACK	WHITE	RED	BLUE	YELLOW	BL/WH	BROWN	ORANGE	OR-BLK
INCHES	24	24	80	50	70	50	50	50	50
TOL(+/-)	3/8	3/8	3/8	3/8	3/8	3/8	3/8	3/8	3/8
MM	610	610	2032	1270	1778	1270	1270	1270	1270
TOL(+/-)	10	10	10	10	10	10	10	10	10

CARTON CHARACTERISTICS

UNITS/CARTON	CARTON/LAYER	# OF LAYERS	UNITS PALLET	PIECE WEIGHT	CARTON WEIGHT	PALLET WEIGHT
1	22	5	110	21 lbs	21.2 lbs	2 375 lbs

CARTON PALLET	CARTON DIMENSIONS	PALLET DIMENSIONS	PALLET DIMENSIONS LOADED , INCLUDING WOOD PALLET
110	19 1/2" x 4 1/8" x 3 3/16"	40" x 48" x 7"	40" x 48" x 24"

MISC.

*Will operate any 4, 5 or 6 T12/HO(800 mA) lamp combinations provided the total lamp length is not less than 24ft. nor more than 48ft.. See product label for further wiring instructions. White Painted Can.

CARTON LABEL

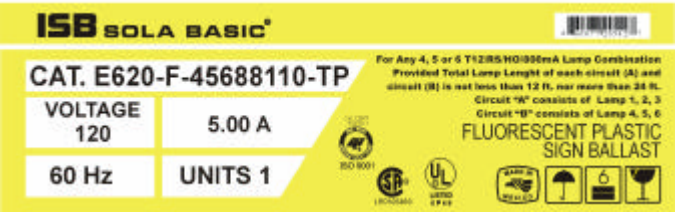

ELECTRICAL DIAGRAM

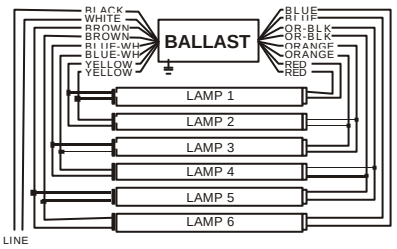

PRODUCT LABEL

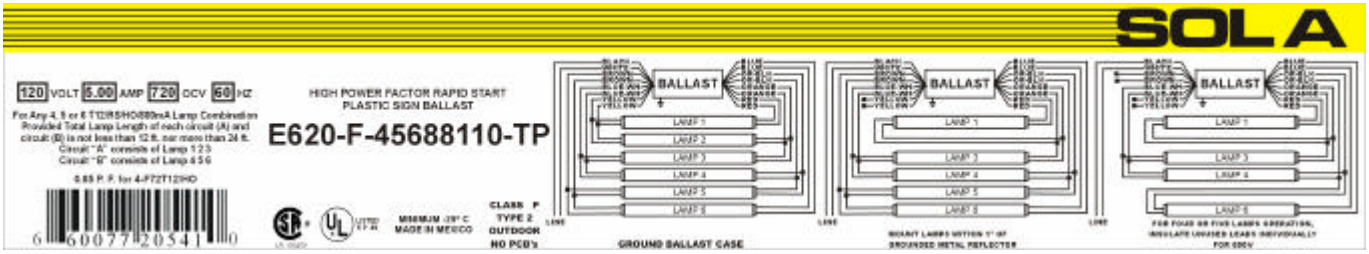

LR 106469

LISTED 5 P 49

Data is based upon tests performed by Industrias Sola Basic in a controlled environment and representative of relative performance. Actual performance can vary depending on operating conditions. Specifications are subject to change without notice.

Made in Mexico by Insdustrias Sola Basic S.A. de C.V.

Certificate No. 008281

Lighting and Power Source
2840 Keller Springs Road,
Suite 1102 & 1103
Carrollton, TX 75006 – 4832
Tel: (888) 385-4448
Fax: (972) 418-5858